KITSAP TRANSIT
CHARLESTON BASE BUS CHARGERS PHASE 1
BREMERTON, WASHINGTON

BREMERTON, WASHINGTON PROJECT NO. 10179662

VICINITY MAP

DRAWING #	DRAWING DISCRIPTION
OG-01	COVER SHEET & INDEX
EL-01	ELECTRICAL - SITE LAYOUT SHEET 1 OF 2
EL-02	ELECTRICAL - SITE LAYOUT SHEET 2 OF 2
EV-01	ELECTRICAL - PARTIAL SITE LAYOUT
OL-01	ELECTRICAL - ONE LINE DIAGRAM PHASE 1
ED-01	ELECTRICAL - DETAILS SHEET 1 OF 2
ED-02	ELECTRICAL - DETAILS SHEET 2 OF 2
ES-01	ELECTRICAL - PANEL SCHEDULES AND SHORT CIRCUIT CALCULATIONS

811 Know what's below. Call before you dig. 811/1-800-424-5555

PROJECT MANAGER
EDWARD COVIELLO

BORE NOTE:
CONTRACTOR SHALL BE AWARE THAT THE CURRENT SURVEY EXTENTS FOR SURFACE AND LOCATES OF EXISTING UTILITIES DOES NOT COVER THE PROPOSED HDD ALIGNMENT. CONTRACTOR TO COORDINATE WITH OWNER FOR PRIVATE UTILITY LOCATION FOR INITIAL SURVEY. CONTRACTOR SHALL BE RESPONSIBLE FOR FOLLOW UP SURVEY TO CONFIRM DEPTHS FOR ALL UNDERGROUND UTILITIES (POTHOLE IF NEEDED) AND UNDERGROUND STRUCTURES WITHIN THE ENTRY AND EXIT WORKSPACES AND ALONG THE ALIGNMENTS. ALL UNDERGROUND STRUCTURES AND UNDERGROUND UTILITIES CROSSING THE ALIGNMENT AND WITHIN THE WORKSPACE AT ENTRY AND EXIT SHALL BE MARKED AND EXPOSED (IF REQUIRED). IF POTENTIAL CONFLICTS ARE IDENTIFIED CONTRACTOR SHALL NOTIFY ENGINEER. AN APPROVED REVISED DRILL PATH WILL BE REQUIRED PRIOR TO CONSTRUCTION.

ABBREVIATIONS:

BC	BURIED CABLE
BLDG	BUILDING
BM	BENCH MARK
CL/℄	CENTER LINE
CMP	CORRUGATED METAL PIPE
CMU	CONCRETE MASONRY UNIT
CONC	CONCRETE
ø, DIA	DIAMETER
DIM	DIMENSION
EE	ELECTRICAL EQUIPMENT
EL	ELEVATION
FT	FEET
IN	INCH
MAX	MAXIMUM
MIN	MINIMUM
NIC	NOT IN CONTRACT
NTS	NOT TO SCALE
OC	ON CENTER
RAD/R	RADIUS
REF	REFERENCE
REINF	REINFORCING, REINFORCEMENT
SCHED	SCHEDULE
SEC	SECTION
SH	SHEET
SPEC(S)	SPECIFICATION(S)
SQ	SQUARE
STD	STANDARD
TOC	TOP OF CONC
TP	TRANSMISSION POLE
TYP	TYPICAL
UNO	UNLESS NOTED OTHERWISE
WR	WARNING SIGN
XFMR	TRANSFORMER

SYMBOL LEGEND:

- KEY NOTES
- MAIN BREAKER
- TRANSFORMER
- ATS
- SUB PANELS
- HAND HOLES
- METER
- CAMERAS
- CHARGERS
- SECTION DETAIL CALL OUTS

LINE LEGEND:

- E — EXISTING CAMERA CONDUIT
- SS — EXISTING SEWER
- SD — EXISTING STORM DRAIN
- UGT — EXISTING UNDERGROUND TELEPHONE
- W — EXISTING WATER
- G — EXISTING GAS
- X — EXISTING CHAIN LINK FENCE
- EXISTING FENCE AND GATES
- UGE — EXISTING UNDERGROUND ELECTRICAL
- OHE — EXISTING OVERHEAD ELECTRICAL
- 480V — NEW 480 VOLTAGE UNDERGROUND
- MV — NEW MEDIUM VOLTAGE UNDERGROUND
- STAGING AND STORING BOUNDARY
- CONCRETE

ISSUE	DATE	DESCRIPTION

PROJECT MANAGER	S. EVERETT
ENGINEER	K. LEAVELL
DRAFTER	R. REEVES
QC	T. MORRIS
PROJECT NUMBER	10179662

BRIAN K. MORRIS III — STATE OF WASHINGTON — 36559 — REGISTERED PROFESSIONAL ENGINEER

2/5/2021

KITSAP TRANSIT
CHARLESTON BASE BUS CHARGERS PHASE 1
BREMERTON, WASHINGTON

COVER SHEET & INDEX

0 1" 2"

FILENAME KTS01G-01
SCALE N.T.S.

SHEET OG-01

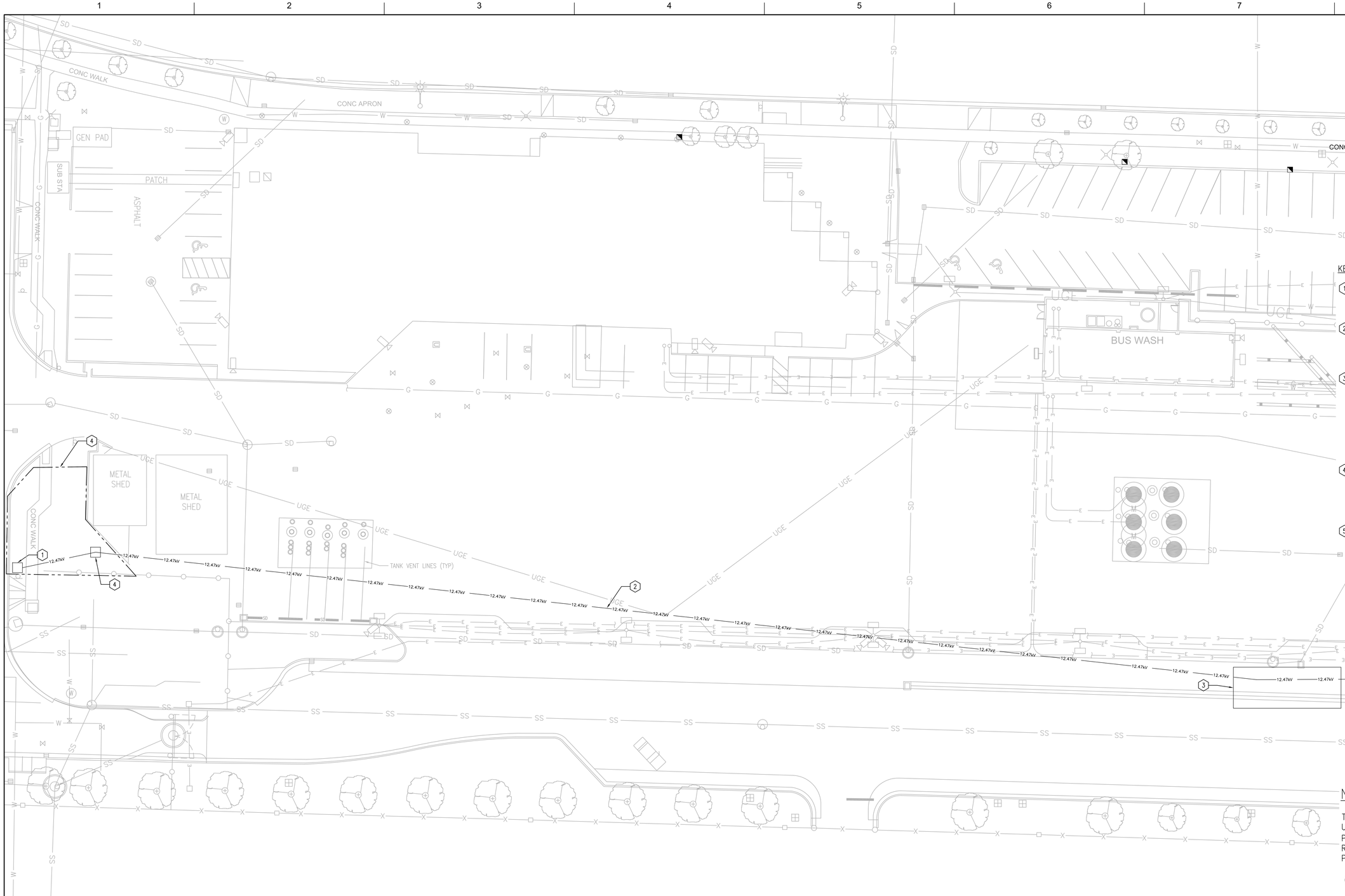

SCALE: 1"=20'

20 0 20 40

SCALE IN FEET

KEY NOTES:

1. PSE TO INSTALL NEW JUNCTION. CONTRACTOR TO CONNECT BORED CONDUIT TO VAULT. COORDINATE WITH PSE FOR FINAL LOCATION.
2. CONTRACTOR TO FURNISH BORE CONDUIT AND INSTALL FOR MV ELECTRICAL LINE BY TRENCHLESS CONSTRUCTION METHODS. PSE TO INSTALL MV CONDUCTOR.
3. CONTRACTOR TO COORDINATE BORE ENTRY SIDE WORKSPACE WITH KITSAP TRANSIT, IF REQUIRED. 25'x50' CLEAR AREA OR LESS ANTICIPATED FOR ENTRY PIT, EQUIPMENT, AND MATERIAL. COORDINATE LOCATION WITH OWNER. CONTRACTOR TO INSTALL PULLING VAULT SUPPLIED BY PSE, IF ADDITIONAL PULLING LOCATION IS UTILIZED.
4. APPROXIMATE HDD EXIT POINT. CONTRACTOR TO COORDINATE WITH PSE FOR JUNCTION LOCATION AND CONTRACTOR TO INSTALL CONDUIT FROM BORE END TO VAULT USING OPEN CUT, AS REQUIRED.
5. APPROXIMATE LOCATION FOR RECEIVING AREA. CONTRACTOR TO COORDINATE WITH OWNER.

NOTE

THE APPROXIMATE LOCATION OF EXISTING UNDERGROUND UTILITIES ARE SHOWN ON THE PLANS. IT IS THE CONTRACTOR'S RESPONSIBILITY TO REQUEST UTILITY LOCATES PER STATE LAW.

CALL 48 HOURS BEFORE YOU DIG 811

ISSUE	DATE	DESCRIPTION

PROJECT MANAGER	S. EVERETT
ENGINEER	K. LEAVELL
DRAFTER	R. REEVES
QC	T. MORRIS
PROJECT NUMBER	10179662

WILLIAM E. MORRIS III
STATE OF WASHINGTON
36559
REGISTERED PROFESSIONAL ENGINEER

2/5/2021

KITSAP TRANSIT
CHARLESTON BASE BUS CHARGERS PHASE 1
BREMERTON, WASHINGTON

ELECTRICAL

SITE LAYOUT
SHEET 1 OF 2

0 1" 2"

FILENAME KTS01E-01

SCALE NONE

SHEET **EL-01**

GENERAL NOTES:

1. PROVIDE CONDUITS, EQUIPMENT PADS, CONDUCTORS, DISCONNECTS AND OTHER CHARGER APPURTENANCES.
2. EMPTY CONDUITS SHALL BE CAPPED AND INSTALLED WITH A PULL STRING FOR FUTURE CONDUCTORS.
3. FOR CONDUIT AND CONDUCTOR SIZING SEE OL-01. FOR CONDUITS CALLOUTS SEE EV-01.

SCALE: 1"=20'

20 0 20 40

1" SCALE IN FEET

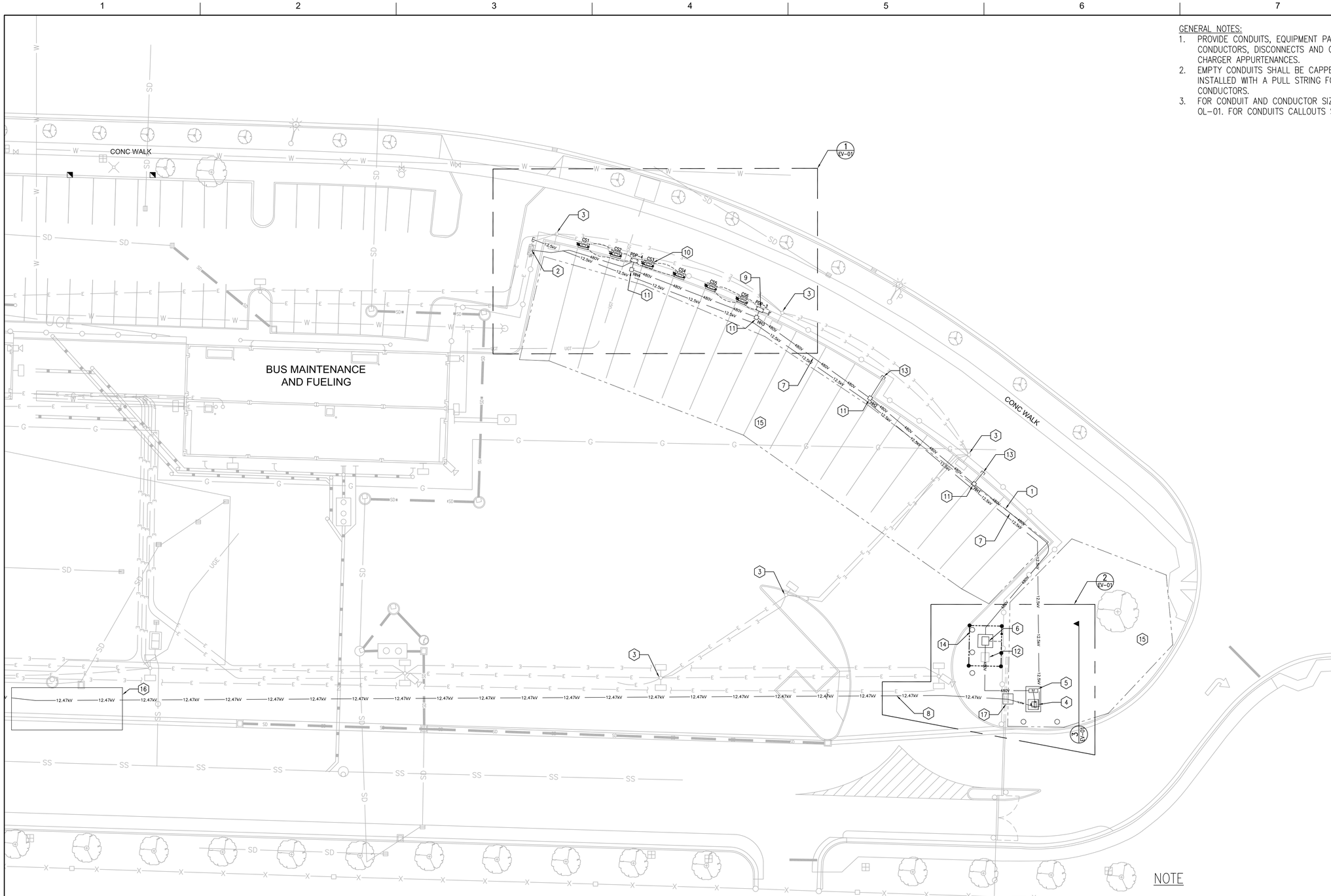

KEY NOTES:

1. PROVIDE ALL DUCT BANK CONDUITS FOR FUTURE AND CURRENT PHASE CONSTRUCTION. INSTALL CONDUIT PER DUCT BANK DETAIL 2 SHEET ED1-01.
2. EXISTING CHARGER. SERVICE TO BE INTERCEPTED AND REROUTED TO FEED FROM PDP-4.
3. EXISTING STREET LIGHT.
4. VAULT TO BE SUPPLIED BY PSE BUT INSTALLED BY CONTRACTOR. TRANSFORMER TO BE INSTALLED BY PSE.
5. CONTRACTOR TO SUPPLY METER TO MEET PSE REQUIREMENTS PER EUSERC. CONTRACTOR TO INSTALL CONDUIT AND SECONDARY CONDUCTOR BETWEEN TRANSFORMER AND SWITCHGEAR. PANEL SHALL HAVE CT COMPARTMENT WITH TEST SWITCH BLOCK. COORDINATE METERING PANEL INSTALLATION WITH PSE.
6. MAIN SWITCHGEAR, SIZE AND, INSTALL PER ONE LINE DIAGRAM SHEET OL-01.
7. SAW CUT AND EXCAVATE WITHIN EXISTING CONCRETE TO INSTALL CONDUIT AND HAND HOLES. TRENCH BACKFILL PER DETAIL 1 ON SHEET ED-01.
8. CONTRACTOR TO FURNISH BORE CONDUIT AND INSTALL MV ELECTRICAL LINE BY TRENCHLESS CONSTRUCTION METHODS. PSE TO INSTALL MV CONDUCTOR.
9. SUB PANEL FOR BRANCH BREAKERS.
10. CHARGE POINT CPE250 CHARGER FURNISHED BY OWNER. SEE DETAILS ON SHEET ED-02 FOR INSTALLATION UNDER THIS CONTRACT.
11. INSTALL HAND HOLES PER DETAIL 3 ON SHEET ED-01. TYPE 2 SIZE TYPICAL.
12. PROVIDE ATS PAD AS SHOWN. SEE DETAIL 3 ON EV-01 FOR CONDUIT ROUTING AND CAPPING.
13. INSTALL AND CAP CONDUIT FROM HANDHOLE TO BACK OF CURB FOR FUTURE CONNECTIONS TO SUBPANEL.
14. 6" CONCRETE BOLLARDS, COORDINATE LOCATION WITH PSE.
15. CONTRACTOR STAGING, STORAGE AND BORING AREAS. TO BE RESTORED TO EXISTING CONDITIONS AT END OF PROJECT. CONTRACTOR TO PROVIDE KITSAP TRANSIT BUS ACCESS TO ALL AREAS AT ALL TIMES.
16. CONTRACTOR TO COORDINATE BORE ENTRY SIDE WORKSPACE LOCATION WITH KITSAP TRANSIT, IF REQUIRED. 25'x50' CLEAR AREA OR LESS ANTICIPATED FOR ENTRY PIT, EQUIPMENT, AND MATERIAL. COORDINATE LOCATION WITH OWNER. CONTRACTOR TO INSTALL PULLING VAULT SUPPLIED BY PSE, IF ADDITIONAL PULLING LOCATION IS UTILIZED.
17. CONTRACTOR TO INSTALL CONDUIT FROM BORE END TO VAULT USING OPEN CUT, AS REQUIRED.

NOTE

THE APPROXIMATE LOCATION OF EXISTING UNDERGROUND UTILITIES ARE SHOWN ON THE PLANS. IT IS THE CONTRACTOR'S RESPONSIBILITY TO REQUEST UTILITY LOCATES PER STATE LAW

CALL 48 HOURS BEFORE YOU DIG 811

ISSUE	DATE	DESCRIPTION

PROJECT MANAGER	S. EVERETT
ENGINEER	K. LEAVELL
DRAFTER	R. REEVES
QC	T. MORRIS
PROJECT NUMBER	10179662

WILLIAM E. MORRIS III STATE OF WASHINGTON 36559 REGISTERED PROFESSIONAL ENGINEER

2/5/2021

KITSAP TRANSIT
CHARLESTON BASE BUS CHARGERS PHASE 1
BREMERTON, WASHINGTON

ELECTRICAL

SITE LAYOUT
SHEET 2 OF 2

0 1" 2"

FILENAME	KTS01E-02
SCALE	NONE

SHEET **EL-02**

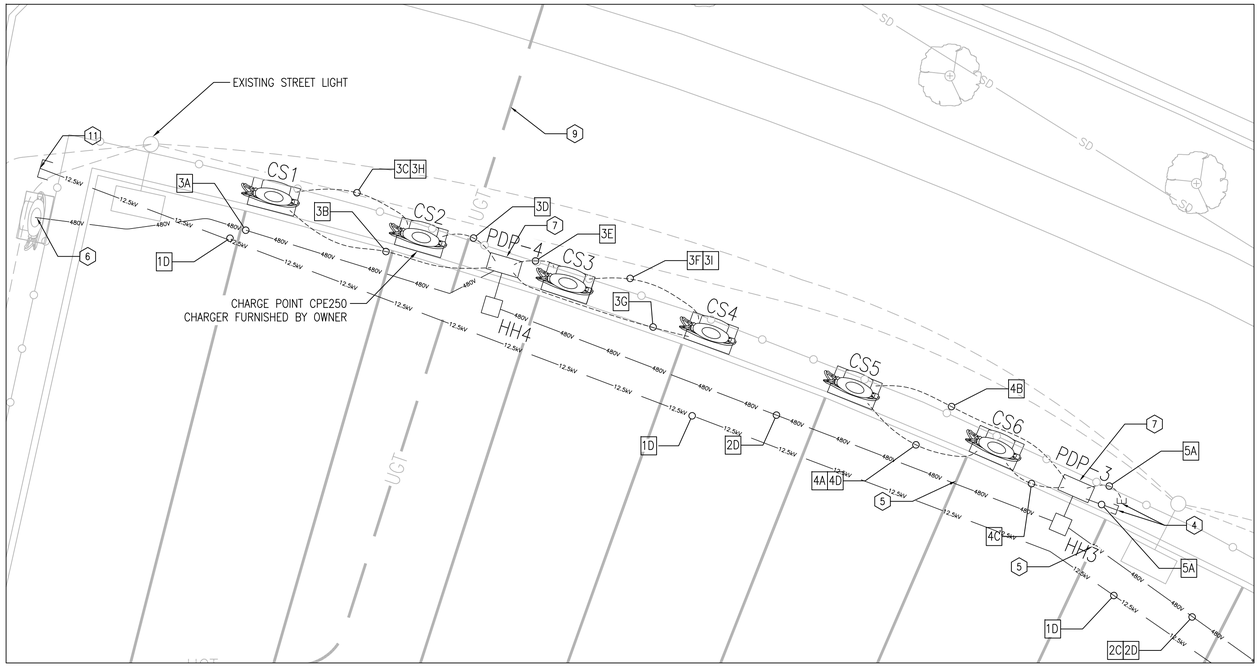

1 EL-02EV-01 PARTIAL PLAN – 1
NTS

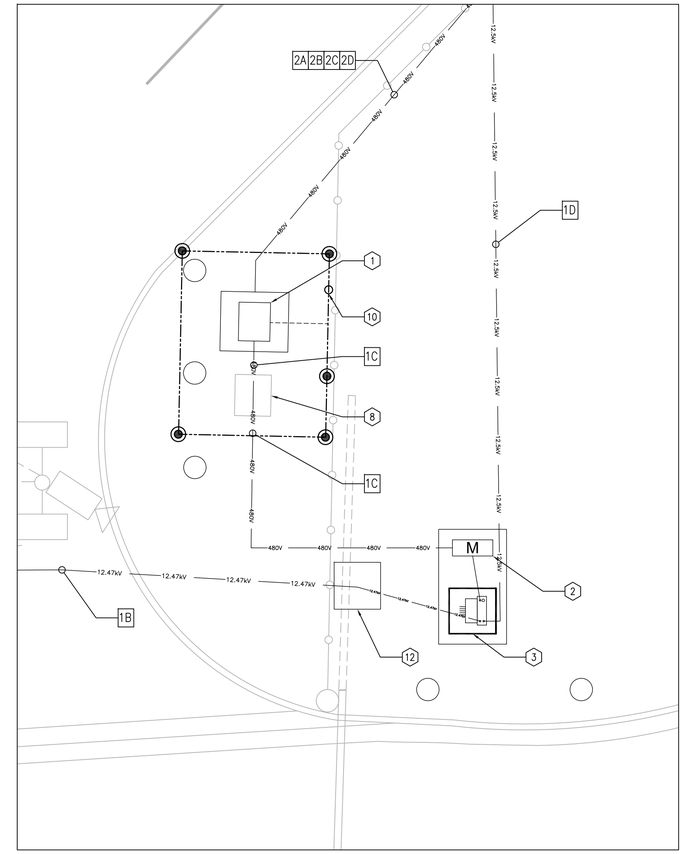

2 EL-02EV-01 PARTIAL PLAN – 2
NTS

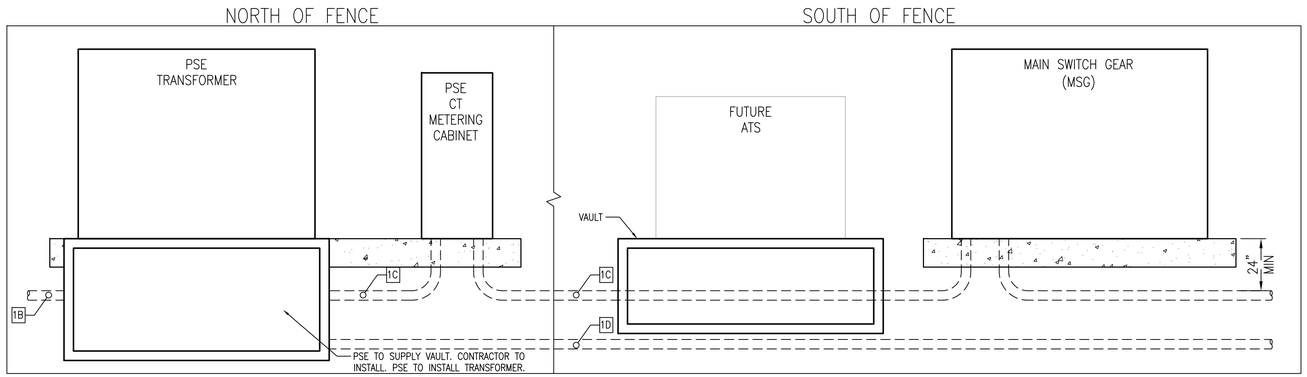

3 EL-02EV-01 TRANSFORMER AND SWITCHGEAR SITE ELEVATION
NTS

GENERAL NOTES:

1. PROVIDE CHARGER APPURTENANCES UNDER THIS CONTRACT.
2. PROVIDE CONDUIT AND CONDUCTORS IN ACCORDANCE WITH CONDUIT AND CONDUCTOR SCHEDULE ON SHEET OL-01.

KEY NOTES:

1. MAIN SWITCHGEAR TO BE PROVIDED BY PER ONE LINE DIAGRAM SHEET OL-01. INSTALL ON OUTDOOR EQUIPMENT PAD PER DETAIL 1 ON SHEET ED-02.
2. CONTRACTOR TO SUPPLY METER TO MEET PSE REQUIREMENTS PER EUSERC. CONTRACTOR TO INSTALL CONDUIT AND SECONDARY CONDUCTOR BETWEEN TRANSFORMER AND SWITCHGEAR. PANEL SHALL HAVE CT COMPARTMENT WITH TEST SWITCH BLOCK. COORDINATE METERING PANEL INSTALLATION WITH PSE.
3. VAULT TO BE SUPPLIED BY PSE BUT INSTALLED BY CONTRACTOR. TRANSFORMER TO BE INSTALLED BY PSE.
4. INSTALL AND CAP 2–2" CONDUITS FROM PDP–3 FOR FUTURE.
5. SAW CUT AND TRENCH BACKFILL PER DETAIL 2 ON SHEET ED–01.
6. EXISTING CHARGER. SERVICE TO BE REROUTED AND FED FROM PDP–4. REMOVE EXISTING CONDUCTOR TO EXISTING CHARGER. CUT AND CAP EXISTING CONDUIT.
7. BREAKER SUB PANEL. INSTALLED UNDER THIS CONTRACT. PROVIDE ON EQUIPMENT STRUTS PER DETAIL 2 ED–02.
8. PROVIDE ATS EQUIPMENT PAD AS SHOWN. PROVIDE CONDUIT, CAPPED AND PLACED AS SHOWN ON ELEVATION PLAN. 5X5 VAULT WITH LID. PROVIDE COMPLETE SERVICE LOOP (30FT). COIL CABLE IN BOTTOM OF VAULT FOR FUTURE INSTALLATION OF ATS.
9. VERIFY UNDERGROUND COMMUNICATION LINE LOCATIONS AND COORDINATE RELOCATIONS IF REQUIRED.
10. #4 CU CABLE GROUND RING. INSTALL PER SPECIFICATION SECTION 26 05 26. SIZE GROUND RODS PER SPECIFICATION SECTION 26 05 26.
11. CAP 4" CONDUIT BEYOND BACK OF CURB FOR FUTURE PRIMARY VAULT AND CABLE.
12. CONTRACTOR TO INSTALL CONDUIT FROM BORE END TO VAULT USING OPEN CUT, AS REQUIRED.

NOTE

THE APPROXIMATE LOCATION OF EXISTING UNDERGROUND UTILITIES ARE SHOWN ON THE PLANS. IT IS THE CONTRACTOR'S RESPONSIBILITY TO REQUEST UTILITY LOCATES PER STATE LAW

CALL 48 HOURS BEFORE YOU DIG 811

ISSUE	DATE	DESCRIPTION

PROJECT MANAGER	S. EVERETT
ENGINEER	K. LEAVELL
DRAFTER	R. REEVES
QC	T. MORRIS
PROJECT NUMBER	10179662

WILLIAM E. MORRIS III — STATE OF WASHINGTON — 36559 — REGISTERED PROFESSIONAL ENGINEER
2/5/2021

KITSAP TRANSIT
CHARLESTON BASE BUS CHARGERS PHASE 1
BREMERTON, WASHINGTON

ELECTRICAL

PARTIAL SITE LAYOUT

0 1" 2"

FILENAME KTS01E–03
SCALE NONE

SHEET **EV-01**

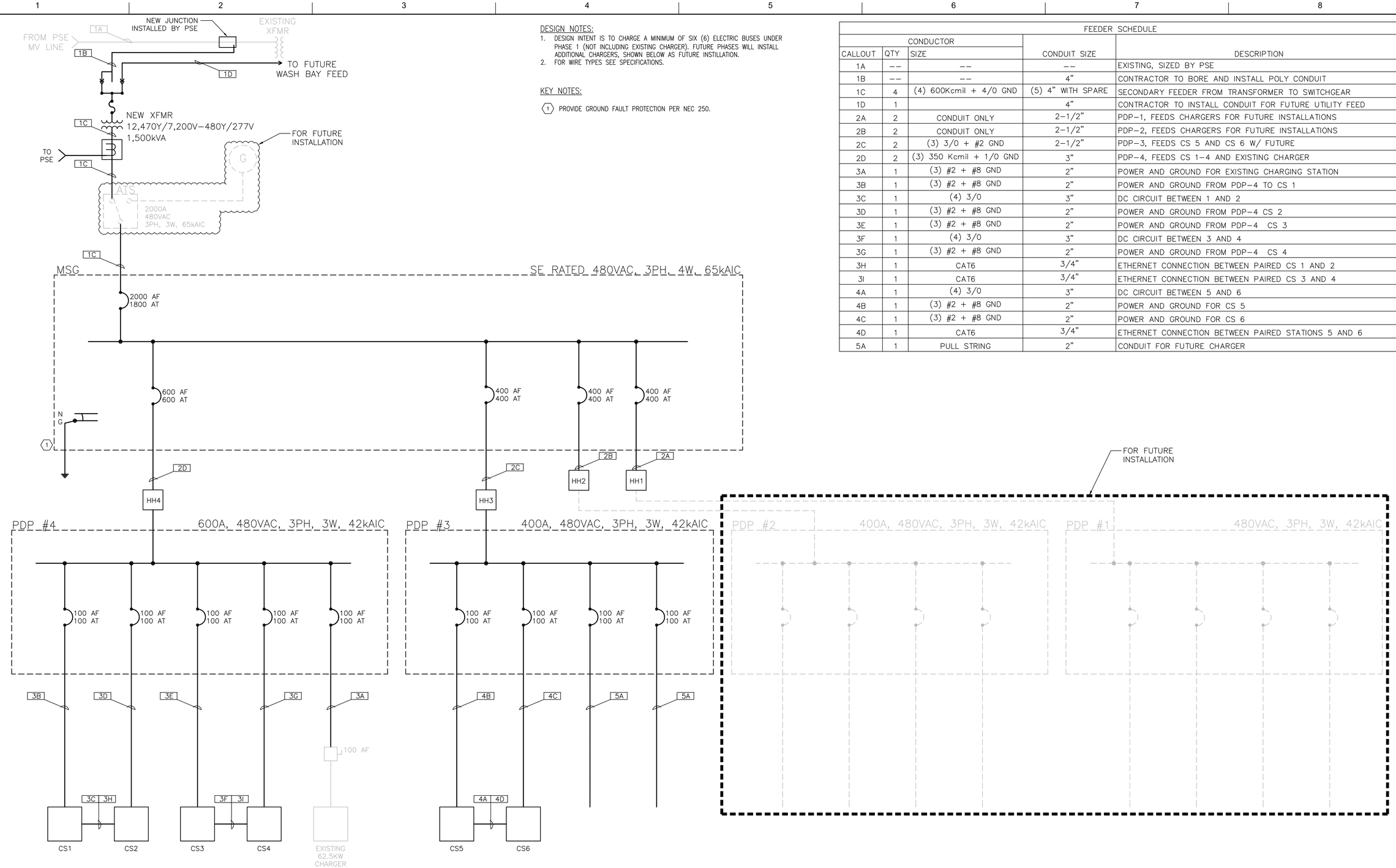

DESIGN NOTES:

1. DESIGN INTENT IS TO CHARGE A MINIMUM OF SIX (6) ELECTRIC BUSES UNDER PHASE 1 (NOT INCLUDING EXISTING CHARGER). FUTURE PHASES WILL INSTALL ADDITIONAL CHARGERS, SHOWN BELOW AS FUTURE INSTILLATION.
2. FOR WIRE TYPES SEE SPECIFICATIONS.

KEY NOTES:

(1) PROVIDE GROUND FAULT PROTECTION PER NEC 250.

FEEDER SCHEDULE

CONDUCTOR			CONDUIT SIZE	DESCRIPTION
CALLOUT	QTY	SIZE		
1A	--	--	--	EXISTING, SIZED BY PSE
1B	--	--	4"	CONTRACTOR TO BORE AND INSTALL POLY CONDUIT
1C	4	(4) 600Kcmil + 4/0 GND	(5) 4" WITH SPARE	SECONDARY FEEDER FROM TRANSFORMER TO SWITCHGEAR
1D	1		4"	CONTRACTOR TO INSTALL CONDUIT FOR FUTURE UTILITY FEED
2A	2	CONDUIT ONLY	2-1/2"	PDP-1, FEEDS CHARGERS FOR FUTURE INSTALLATIONS
2B	2	CONDUIT ONLY	2-1/2"	PDP-2, FEEDS CHARGERS FOR FUTURE INSTALLATIONS
2C	2	(3) 3/0 + #2 GND	2-1/2"	PDP-3, FEEDS CS 5 AND CS 6 W/ FUTURE
2D	2	(3) 350 Kcmil + 1/0 GND	3"	PDP-4, FEEDS CS 1-4 AND EXISTING CHARGER
3A	1	(3) #2 + #8 GND	2"	POWER AND GROUND FOR EXISTING CHARGING STATION
3B	1	(3) #2 + #8 GND	2"	POWER AND GROUND FROM PDP-4 TO CS 1
3C	1	(4) 3/0	3"	DC CIRCUIT BETWEEN 1 AND 2
3D	1	(3) #2 + #8 GND	2"	POWER AND GROUND FROM PDP-4 CS 2
3E	1	(3) #2 + #8 GND	2"	POWER AND GROUND FROM PDP-4 CS 3
3F	1	(4) 3/0	3"	DC CIRCUIT BETWEEN 3 AND 4
3G	1	(3) #2 + #8 GND	2"	POWER AND GROUND FROM PDP-4 CS 4
3H	1	CAT6	3/4"	ETHERNET CONNECTION BETWEEN PAIRED CS 1 AND 2
3I	1	CAT6	3/4"	ETHERNET CONNECTION BETWEEN PAIRED CS 3 AND 4
4A	1	(4) 3/0	3"	DC CIRCUIT BETWEEN 5 AND 6
4B	1	(3) #2 + #8 GND	2"	POWER AND GROUND FOR CS 5
4C	1	(3) #2 + #8 GND	2"	POWER AND GROUND FOR CS 6
4D	1	CAT6	3/4"	ETHERNET CONNECTION BETWEEN PAIRED STATIONS 5 AND 6
5A	1	PULL STRING	2"	CONDUIT FOR FUTURE CHARGER

ISSUE	DATE	DESCRIPTION

PROJECT MANAGER	S. EVERETT
ENGINEER	K. LEAVELL
DRAFTER	R. REEVES
QC	T. MORRIS
PROJECT NUMBER	10179662

WILLIAM E. MORRIS III
STATE OF WASHINGTON
36559
REGISTERED
PROFESSIONAL ENGINEER
2/5/2021

KITSAP TRANSIT
CHARLESTON BASE BUS CHARGERS PHASE 1
BREMERTON, WASHINGTON

ELECTRICAL

ONE LINE DIAGRAM
PHASE 1

0 1" 2"

FILENAME KTS01E-08
SCALE NONE

SHEET
OL-01

MAIN SWITCH GEAR

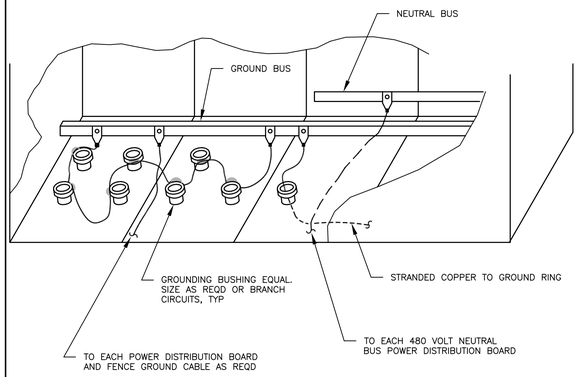

DETAIL 1
MAIN SWITCH GEAR (MSG)

1 / EL-01EV-01

SCALE: NTS

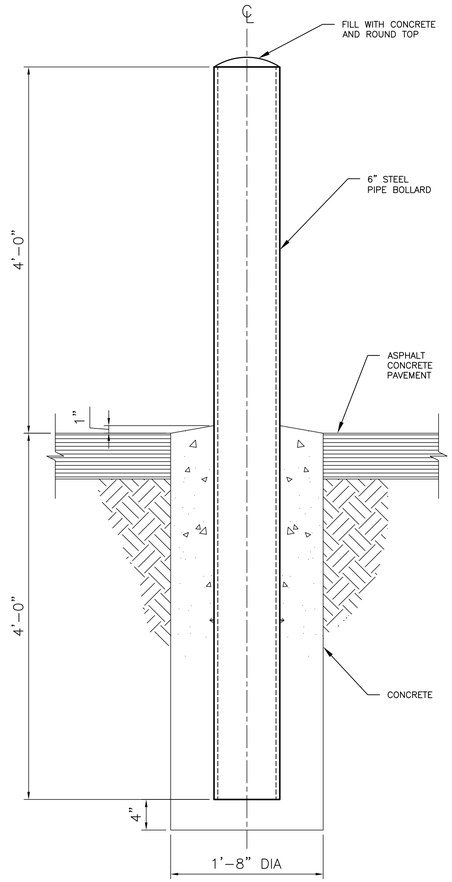

NOTE:

1. REINFORCING FOR CONCRETE SLAB NOT SHOWN.

DETAIL 5: BOLLARD DETAIL

2 / EL-01EV-01

SCALE: NTS

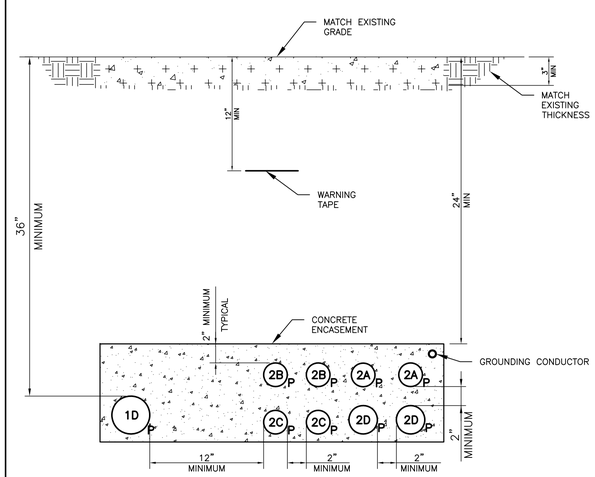

NOTES:

1. CONDUITS SIZED PER CABLE AND CONDUIT

DETAIL 2
CONCRETE ENCASED DUCTBANK

3 / EL-01EV-01

SCALE: NTS

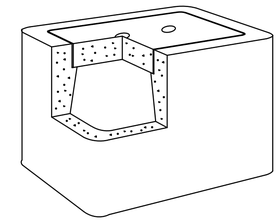

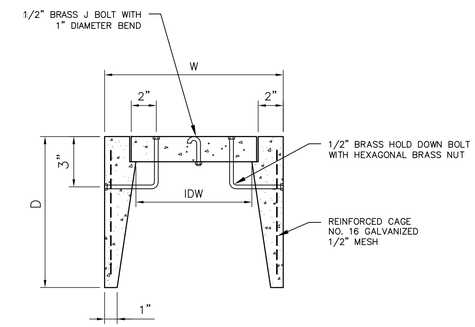

PULL BOX – CONCRETE MINIMUM DIMENSIONS					
TYPE 2			TYPE 3		
L	=	25"	L	=	33"
W	=	16"	W	=	20"
D	=	12"	D	=	12"
I D L	=	20"	I D L	=	28"
I D W	=	11"	I D W	=	15"
C L	=	21"	C L	=	29"
C W	=	12"	C W	=	16"

NOTE: WHEN REPLACING AN EXISTING PULL BOX, ADJUST CONDUIT STUB HEIGHT ACCORDINGLY

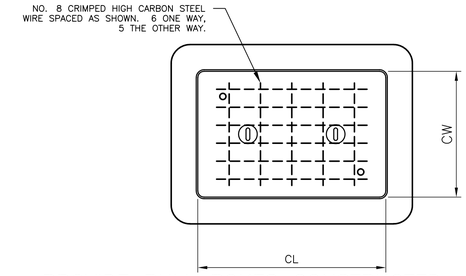

PROVIDE PULL BOXES CONSTRUCTED OF CLASS "DD" CONCRETE OR EQUAL

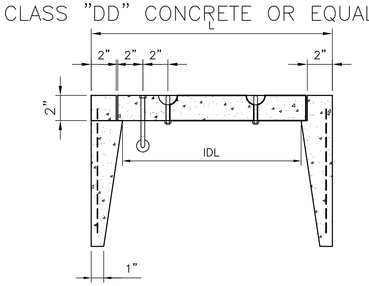

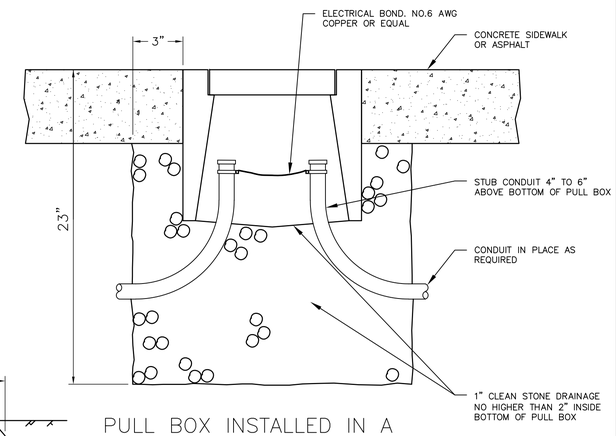

PULL BOX INSTALLED IN A SIDEWALK OR ASPHALT

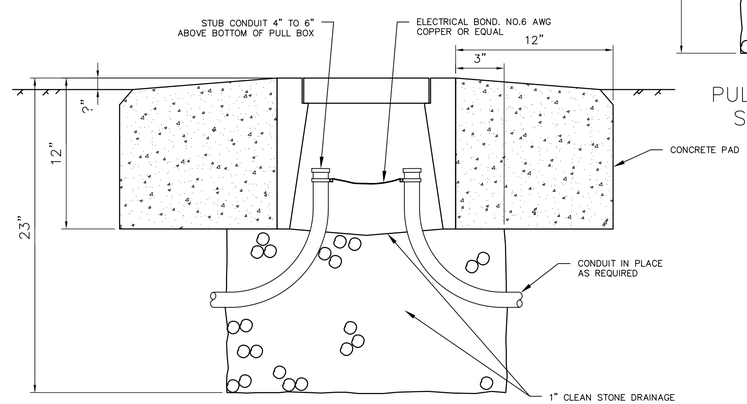

PULL BOX INSTALLED IN DIRT

ELECTRICAL DETAIL DRAWING

PULL BOX CONCRETE TYPE 1,2 & 3

PB1

NO SCALE REVISED 21-OCT-2004

ISSUE	DATE	DESCRIPTION

PROJECT MANAGER	S. EVERETT
ENGINEER	K. LEAVELL
DRAFTER	R. REEVES
QC	T. MORRIS
PROJECT NUMBER	10179662

WILLIAM E. MORRIS III — STATE OF WASHINGTON — 36559 — REGISTERED PROFESSIONAL ENGINEER

2/5/2021

KITSAP TRANSIT
CHARLESTON BASE BUS CHARGERS PHASE 1
BREMERTON, WASHINGTON

ELECTRICAL

DETAILS
SHEET 1 OF 2

0 1" 2"

FILENAME KTS01E-20

SCALE NONE

SHEET **ED-01**

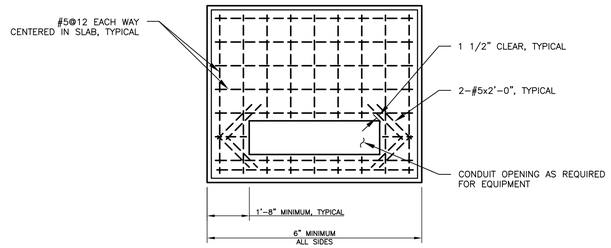

PLAN

EQUIPMENT TAG	DIMENSIONS (WxLxH)
MSG	50"x60"x6"
T-FORMER AND METER	95"x106"x6"
CS PADS	51"x46"x6"

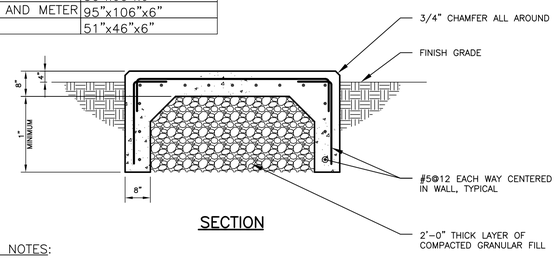

SECTION

GENERAL NOTES:

1. PROVIDE CONDUIT STUBS AS REQUIRED

DETAIL 1
REINFORCED CONCRETE PAD FOR OUTDOOR ELECTRICAL EQUIPMENT

1 / EL-01EV-01 NTS

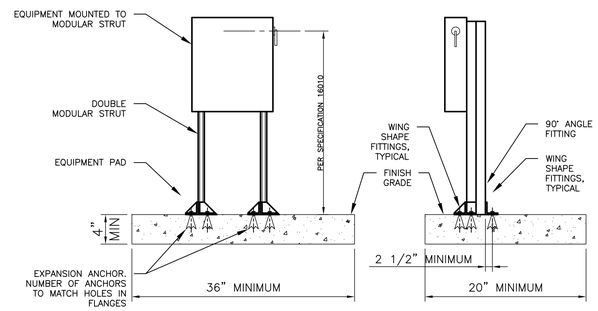

FRONT VIEW SIDE VIEW

NOTES:

1. EQUIPMENT LOAD SHALL NOT EXCEED 200 LBS.
2. RACK ASSEMBLY MATERIAL: GALVANIZED
3. MODULAR STRUT WIDTH: 1 5/8".
4. ANCHORS: STAINLESS STEEL, 3/8" DIAMETER, 3 1/2" EMBEDMENT
5. PROTECT SURFACES WITH DISSIMILAR MATERIALS
6. REPAIR CUT ENDS AND DAMAGED SURFACES

DETAIL 2
MODULAR SUPPORT RACK

2 / EL-01EV-01 NTS

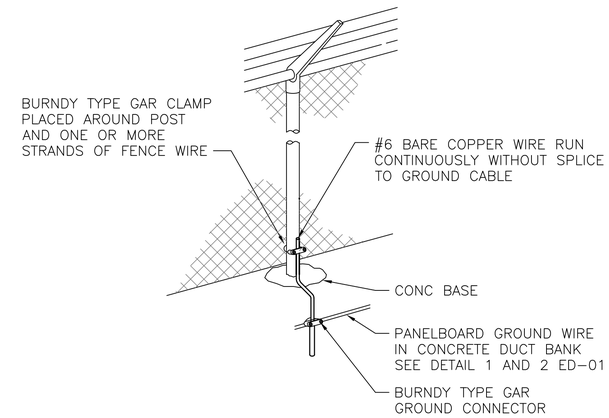

DETAIL 3
GATE AND FENCE GROUNDING

3 / EL-01EV-01 NTS

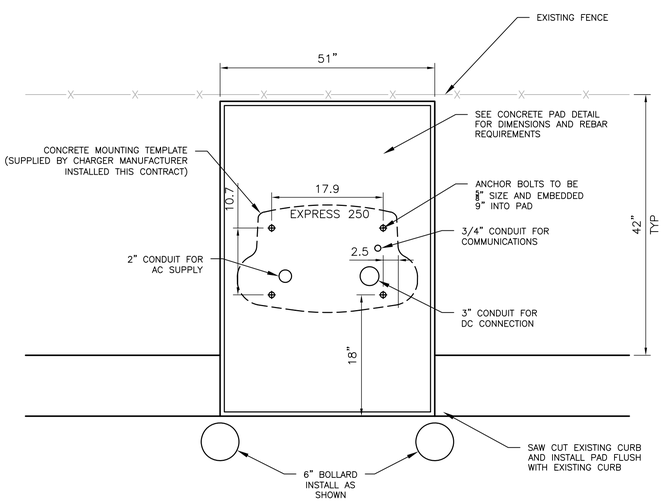

DETAIL 4
CHARGER POINT EQUIPMENT MOUNTING TEMPLATE AND EQUIPMENT PAD

4 / EL-01EV-01 NTS

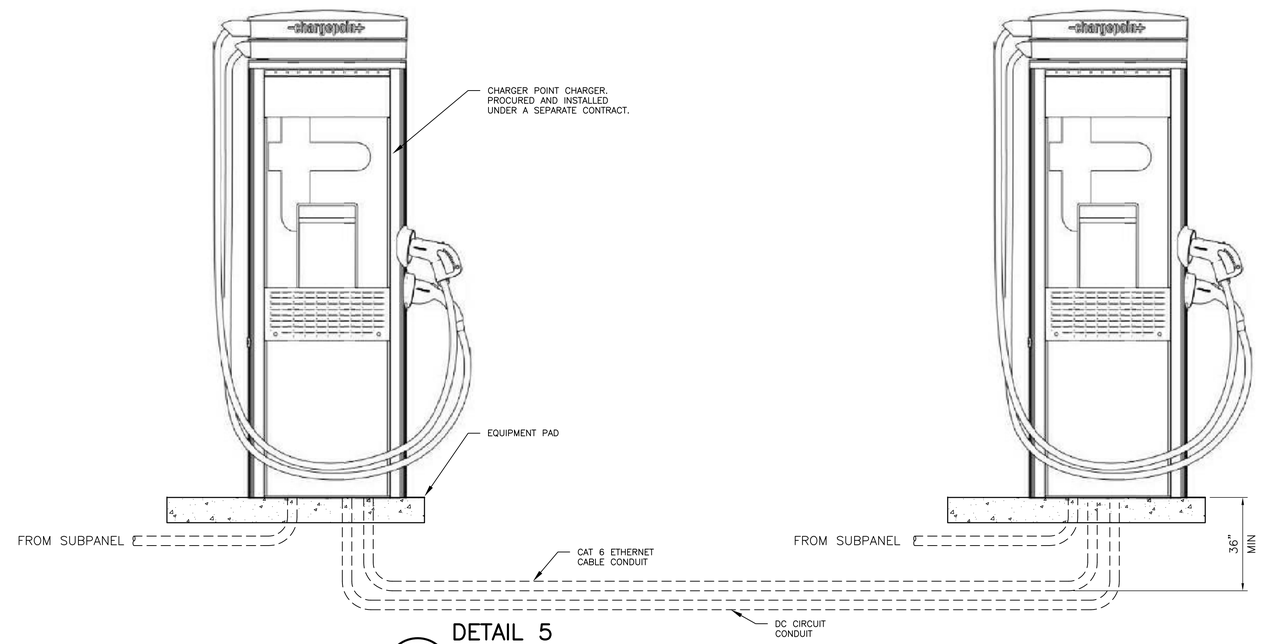

DETAIL 5
STANDARD CHARGER STAND WITH DISCONNECT SWITCH

5 / EL-01EV-01 NTS

ISSUE	DATE	DESCRIPTION

PROJECT MANAGER	S. EVERETT
ENGINEER	K. LEAVELL
DRAFTER	R. REEVES
QC	T. MORRIS
PROJECT NUMBER	10179662

ARLIAN E. MORRIS III — STATE OF WASHINGTON — 36559 — REGISTERED PROFESSIONAL ENGINEER

2/5/2021

KITSAP TRANSIT
CHARLESTON BASE BUS CHARGERS PHASE 1
BREMERTON, WASHINGTON

ELECTRICAL

DETAILS
SHEET 2 OF 2

0 1" 2"

FILENAME KTS01E-21
SCALE NONE

SHEET **ED-02**

PANELBOARD NO: PDP #1

VOLTAGE:	480	BUS RATING (A):	400
PHASE:	3	MAIN OC DEVICE:	MLO
WIRE:	3+GND	INTERRUPTING RATING (KA):	42
200% NEUTRAL:	NO	SERVICE ENTRANCE LABEL:	NO
ENCLOSURE:	NEMA 3R		
MOUNTING:	SURFACE		
LOCATION:	BUS CHARGING LOT		

CKT		CONNECTED LOAD (VA)				OCP			OCP		CONNECTED LOAD (VA)					CKT
NO.	DESCRIPTION	LTS	REC	MECH	MISC	AMPS	P		AMPS	P	LTS	REC	MECH	MISC	DESCRIPTION	NO.
1					21,166			A						21,166		2
3	FUTURE CHARGING STATION				21,166	100	3	B	100	3				21,166	FUTURE CHARGING STATION	4
5					21,166			C						21,166		6
7					21,166			A						21,166		8
9	FUTURE CHARGING STATION				21,166	100	3	B	100	3				21,166	FUTURE CHARGING STATION	10
11					21,166			C						21,166		12
13								A								14
15								B								16
17								C								18
19								A								20
21								B								22
23								C								24
25								A								26

LOAD SUMMARY

		LTS	REC	MECH	MISC	SPARE	TOTAL						PHASE BALANCE	
CONNECTED LOAD (KVA)		0.0	0.0	0.0	254.0	---	254.0		480	LINE-TO-LINE VOLTS			PHASE A (KVA)	85
DEMAND FACTOR		1.25	NEC	1.10	1.00	15%	---		306	CONNECTED AMPS			PHASE B (KVA)	85
DESIGN LOAD (KVA)		0.0	0.0	0.0	254.0	38.1	292.1		351	DESIGN AMPS			PHASE C (KVA)	85

PANELBOARD NO: PDP #2

VOLTAGE:	480	BUS RATING (A):	400
PHASE:	3	MAIN OC DEVICE:	MLO
WIRE:	3+GND	INTERRUPTING RATING (KA):	42
200% NEUTRAL:	NO	SERVICE ENTRANCE LABEL:	NO
ENCLOSURE:	NEMA 3R		
MOUNTING:	SURFACE		
LOCATION:	BUS CHARGING LOT		

CKT		CONNECTED LOAD (VA)				OCP			OCP		CONNECTED LOAD (VA)					CKT
NO.	DESCRIPTION	LTS	REC	MECH	MISC	AMPS	P		AMPS	P	LTS	REC	MECH	MISC	DESCRIPTION	NO.
1					21,166			A						21,166		2
3	FUTURE CHARGING STATION				21,166	100	3	B	100	3				21,166	FUTURE CHARGING STATION	4
5					21,166			C						21,166		6
7					21,166			A						21,166		8
9	FUTURE CHARGING STATION				21,166	100	3	B	100	3				21,166	FUTURE CHARGING STATION	10
11					21,166			C						21,166		12
13								A								14
15								B								16
17								C								18
19								A								20
21								B								22
23								C								24
25								A								26

LOAD SUMMARY

		LTS	REC	MECH	MISC	SPARE	TOTAL						PHASE BALANCE	
CONNECTED LOAD (KVA)		0.0	0.0	0.0	254.0	---	254.0		480	LINE-TO-LINE VOLTS			PHASE A (KVA)	85
DEMAND FACTOR		1.25	NEC	1.10	1.00	15%	---		306	CONNECTED AMPS			PHASE B (KVA)	85
DESIGN LOAD (KVA)		0.0	0.0	0.0	254.0	38.1	292.1		351	DESIGN AMPS			PHASE C (KVA)	85

PANELBOARD NO: PDP #3

VOLTAGE:	480	BUS RATING (A):	400
PHASE:	3	MAIN OC DEVICE:	MLO
WIRE:	3+GND	INTERRUPTING RATING (KA):	42
200% NEUTRAL:	NO	SERVICE ENTRANCE LABEL:	NO
ENCLOSURE:	NEMA 3R		
MOUNTING:	SURFACE		
LOCATION:	BUS CHARGING LOT		

CKT		CONNECTED LOAD (VA)				OCP			OCP		CONNECTED LOAD (VA)					CKT
NO.	DESCRIPTION	LTS	REC	MECH	MISC	AMPS	P		AMPS	P	LTS	REC	MECH	MISC	DESCRIPTION	NO.
1					21,166			A						21,166		2
3	CHARGING STATION #5				21,166	100	3	B	100	3				21,166	CHARGING STATION #6	4
5					21,166			C						21,166		6
7					21,166			A						21,166		8
9	FUTURE CHARGING STATION				21,166	100	3	B	100	3				21,166	FUTURE CHARGING STATION	10
11					21,166			C						21,166		12
13								A								14
15								B								16
17								C								18
19								A								20
21								B								22
23								C								24
25								A								26

LOAD SUMMARY

		LTS	REC	MECH	MISC	SPARE	TOTAL						PHASE BALANCE	
CONNECTED LOAD (KVA)		0.0	0.0	0.0	254.0	---	254.0		480	LINE-TO-LINE VOLTS			PHASE A (KVA)	85
DEMAND FACTOR		1.25	NEC	1.10	1.00	15%	---		306	CONNECTED AMPS			PHASE B (KVA)	85
DESIGN LOAD (KVA)		0.0	0.0	0.0	254.0	38.1	292.1		351	DESIGN AMPS			PHASE C (KVA)	85

PANELBOARD NO: PDP #4

VOLTAGE:	480	BUS RATING (A):	600 A
PHASE:	3	MAIN OC DEVICE:	MLO
WIRE:	3+GND	INTERRUPTING RATING (KA):	42
200% NEUTRAL:	NO	SERVICE ENTRANCE LABEL:	NO
ENCLOSURE:	NEMA 3R		
MOUNTING:	SURFACE		
LOCATION:	BUS CHARGING LOT		

CKT		CONNECTED LOAD (VA)				OCP			OCP		CONNECTED LOAD (VA)					CKT
NO.	DESCRIPTION	LTS	REC	MECH	MISC	AMPS	P		AMPS	P	LTS	REC	MECH	MISC	DESCRIPTION	NO.
1					21,166			A						21,166		2
3	CHARGING STATION #1				21,166	100	3	B	100	3				21,166	CHARGING STATION #2	4
5					21,166			C						21,166		6
7					21,166			A						21,166		8
9	CHARGING STATION #3				21,166	100	3	B	100	3				21,166	CHARGING STATION #4	10
11					21,166			C						21,166		12
13					21,166			A								14
15	EXISTING CHARGING STATION				21,166	100	3	B								16
17					21,166			C								18
19								A								20
21								B								22
23								C								24
25								A								26

LOAD SUMMARY

		LTS	REC	MECH	MISC	SPARE	TOTAL						PHASE BALANCE	
CONNECTED LOAD (KVA)		0.0	0.0	0.0	317.5	---	317.5		480	LINE-TO-LINE VOLTS			PHASE A (KVA)	106
DEMAND FACTOR		1.25	NEC	1.10	1.00	15%	---		382	CONNECTED AMPS			PHASE B (KVA)	106
DESIGN LOAD (KVA)		0.0	0.0	0.0	317.5	47.6	365.1		439	DESIGN AMPS			PHASE C (KVA)	106

PANELBOARD NO: MSG

VOLTAGE:	480	BUS RATING (A):	2000
PHASE:	3	MAIN OC DEVICE:	1800/3
WIRE:	3+GND	INTERRUPTING RATING (KA):	65
200% NEUTRAL:	NO	SERVICE ENTRANCE LABEL:	NO
ENCLOSURE:	NEMA 3R		
MOUNTING:	SURFACE		
LOCATION:	BUS CHARGING LOT		

CKT		CONNECTED LOAD (VA)				OCP			OCP		CONNECTED LOAD (VA)					CKT
NO.	DESCRIPTION	LTS	REC	MECH	MISC	AMPS	P		AMPS	P	LTS	REC	MECH	MISC	DESCRIPTION	NO.
1					105,835			A						105,835		2
3	PDP #1 FUTURE				105,835	400	3	B	400	3				105,835	PDP #2 FUTURE	4
5					105,835			C						105,835		6
7					105,835			A						105,835		8
9	PDP #3				105,835	400	3	B	500	3				105,835	PDP #4	10
11					105,835			C						105,835		12
13								A								14
15								B								16
17								C								18
19								A								20
21								B								22
23								C								24
25								A								26

LOAD SUMMARY

		LTS	REC	MECH	MISC	SPARE	TOTAL						PHASE BALANCE	
CONNECTED LOAD (KVA)		0.0	0.0	0.0	1270.0	---	1270.0		480	LINE-TO-LINE VOLTS			PHASE A (KVA)	423
DEMAND FACTOR		1.25	NEC	1.10	1.00	0%	---		1528	CONNECTED AMPS			PHASE B (KVA)	423
DESIGN LOAD (KVA)		0.0	0.0	0.0	1270.0	0.0	1270.0		1528	DESIGN AMPS			PHASE C (KVA)	423

Short Circuit Calculations

Transformers

FAULT LOCATION	TRANS. KVA	PRI. VOLT. L-L	SEC. VOLT. L-L	XFMR %Z	SEC. FLA	XFMR. PRI. LSC	XFMR. SEC. ISC	*MOTOR CONTRIB.	TOTAL CONTRIB. ISC
UTILITY TRANSFORMER – MIN	1500	12470	480	3.5	1804	–	57,345		57345

Feeders

FAULT LOCATION	CKT LEN (FT)	AL CU	SIZE	NO./PH	CONDUIT MAG = 1 NON = 2	CKT VOLT. L-L	CIRCUIT "C"	BEGINNING ISC	FAULT ISC
PDP #4 (FEEDER)	240	CU	350	2	2	480	18594	54336.92	23986.12
PDP #3 (FEEDER)	180	CU	3/0	2	2	480	13923	54336.92	23964.49
PDP #2 (FEEDER)	130	CU	3/0	2	2	480	13923	54336.92	28369.34
PDP #1 (FEEDER)	80	CU	3/0	2	2	480	13923	54336.92	34758.15
MSG (FEEDER)	30	CU	600	4	2	480	28033	57345	54336.92

ISSUE	DATE	DESCRIPTION

PROJECT MANAGER	S. EVERETT
ENGINEER	K. LEAVELL
DRAFTER	R. REEVES
QC	T. MORRIS
PROJECT NUMBER	10179662

WILLIAM R. MORRIS III STATE OF WASHINGTON 36559 REGISTERED PROFESSIONAL ENGINEER

2/5/2021

KITSAP TRANSIT
CHARLESTON BASE BUS CHARGERS PHASE 1
BREMERTON, WASHINGTON

ELECTRICAL

PANEL SCHEDULES AND SHORT CIRCUIT CALCULATIONS

0 1" 2"

FILENAME KTS01E-22

SCALE NONE

SHEET **ES-01**